In Line Unlimited RF Single Density LED RGB Strip Setup

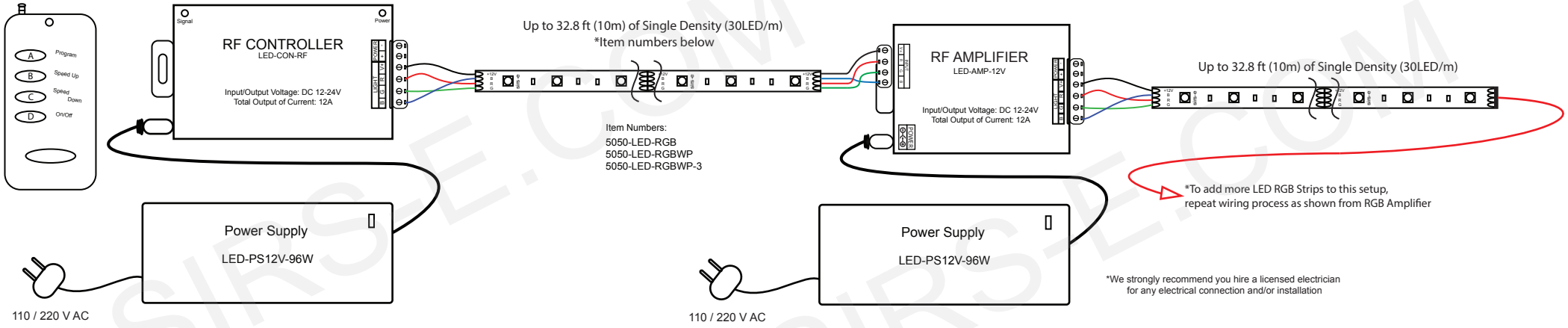

Copyright © 2006-2014 SIRS Electronics Inc. All Rights Reserved