In Line Unlimited RF LED RGB Double Density Strip Setup

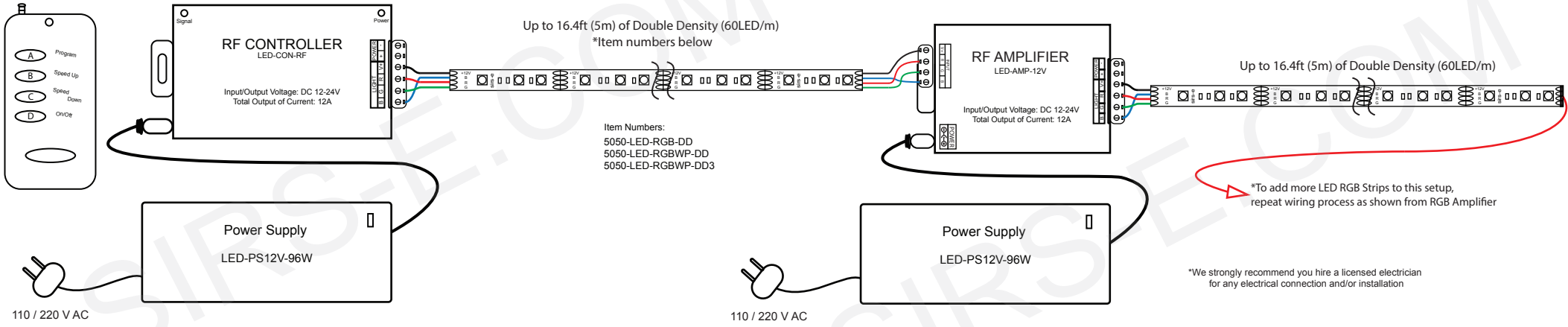

Copyright © 2006-2014 SIRS Electronics Inc. All Rights Reserved