DMX 4-in-1 A-Grade LED Strip Setup Kit 26

Kit Part Number: LED-RGB-PK26

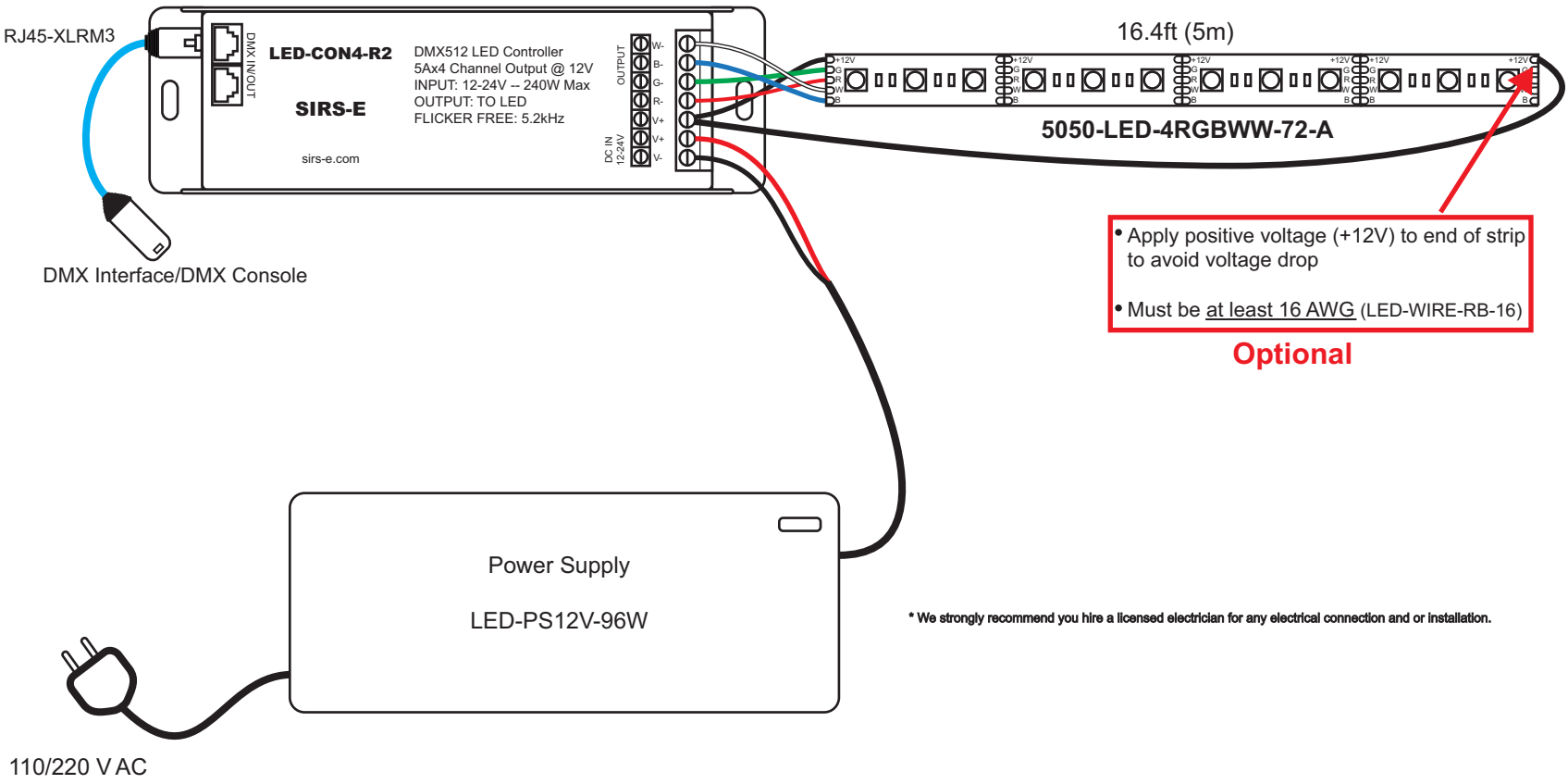

- Apply positive voltage (+12V) to end of strip to avoid voltage drop
- Must be at least 16 AWG (LED-WIRE-RB-16)

Optional

* We strongly recommend you hire a licensed electrician for any electrical connection and or installation.

Copyright © 2006-2016 SIRS Electronics Inc. All Rights Reserved